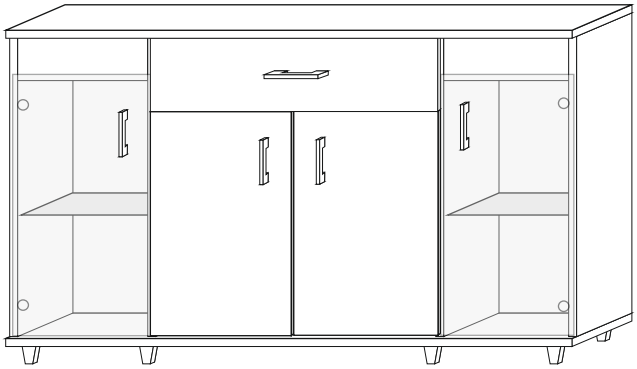

A x1	B x24	C x20	D x20	
E x12	F x5	G x10	H x60	
I x8	J x8	K x24	L x4	M. x4	N x1	O x4

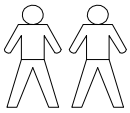

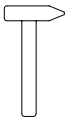

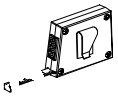

P. x1

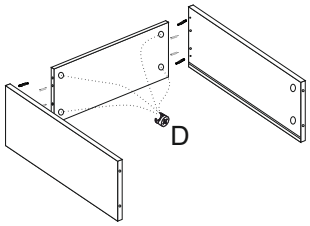

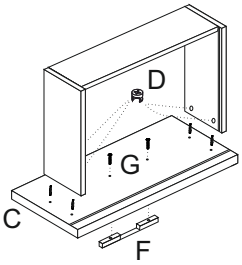

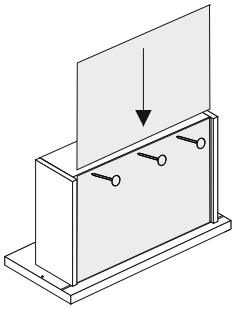

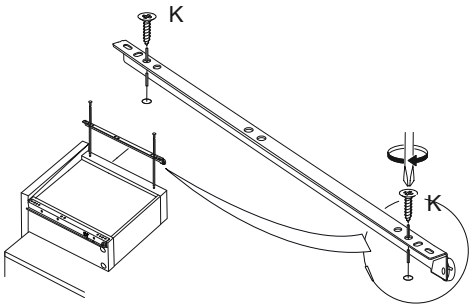

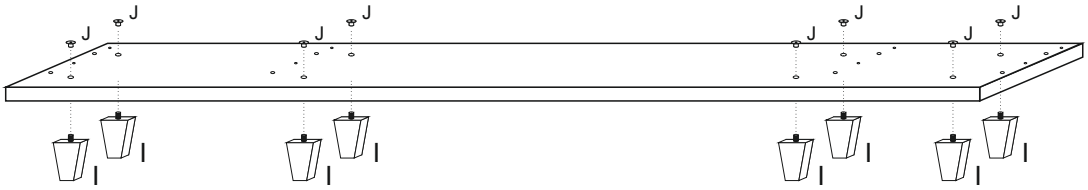

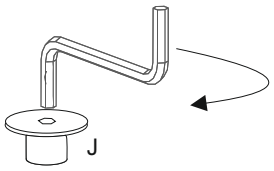

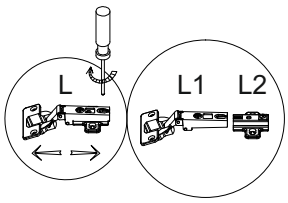

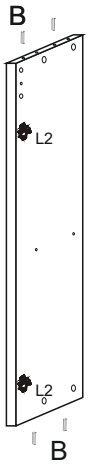

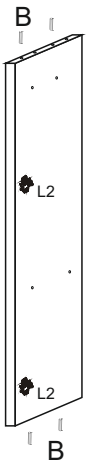

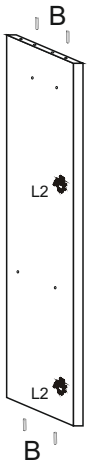

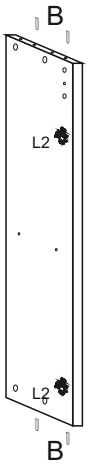

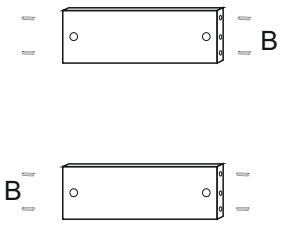

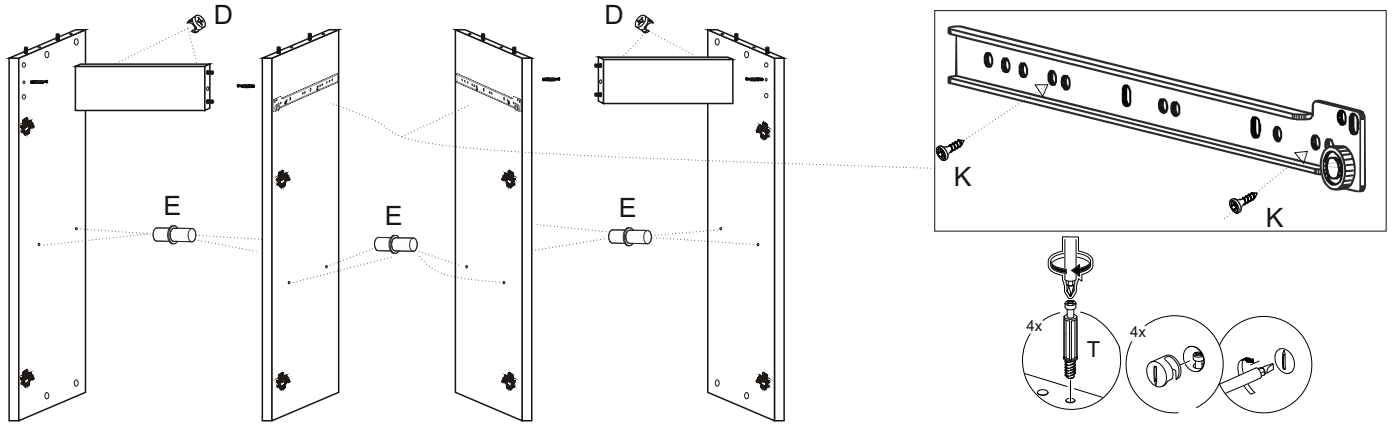

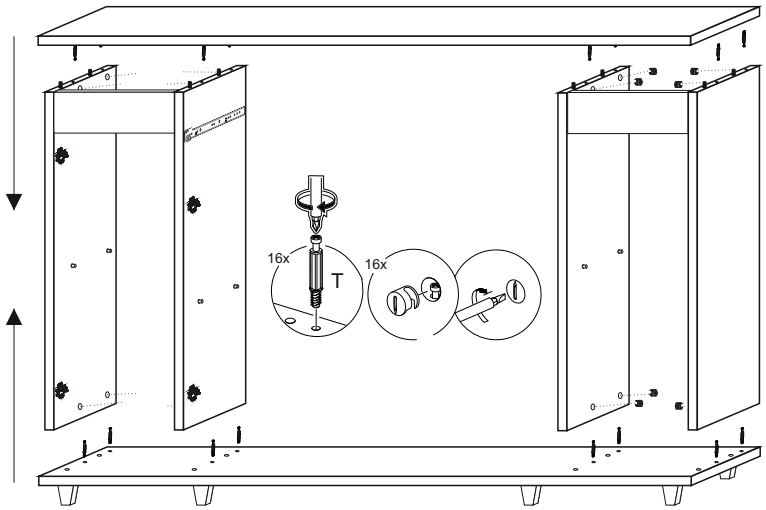

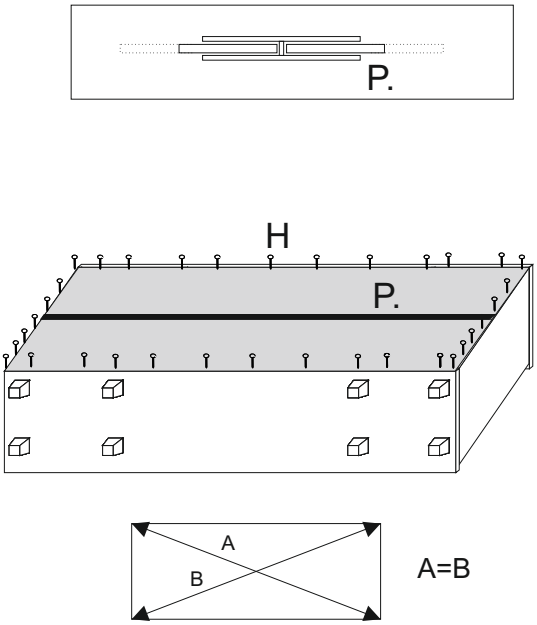

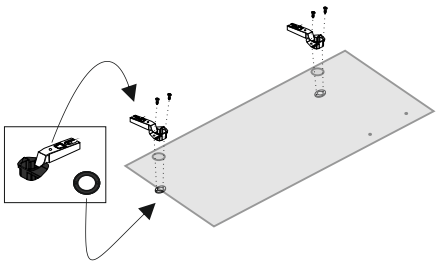

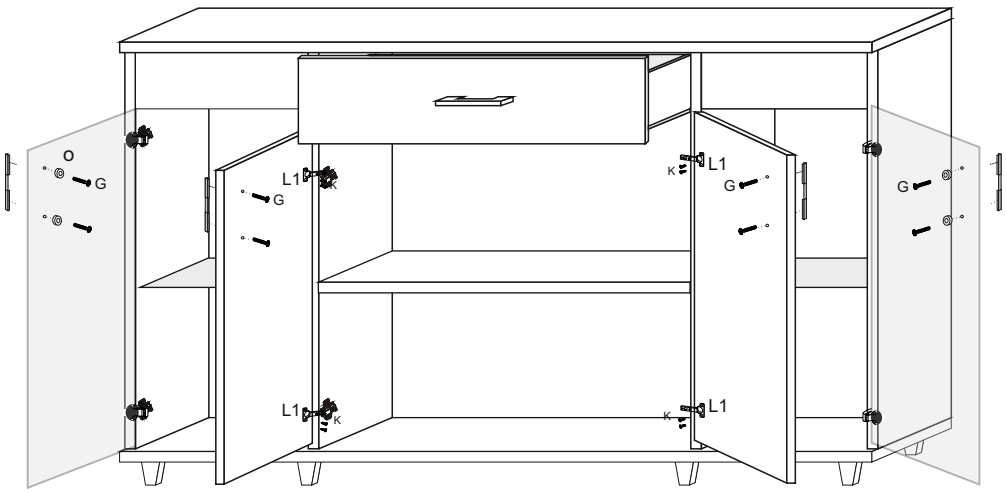

1

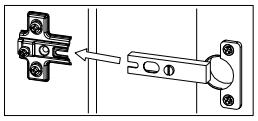

2